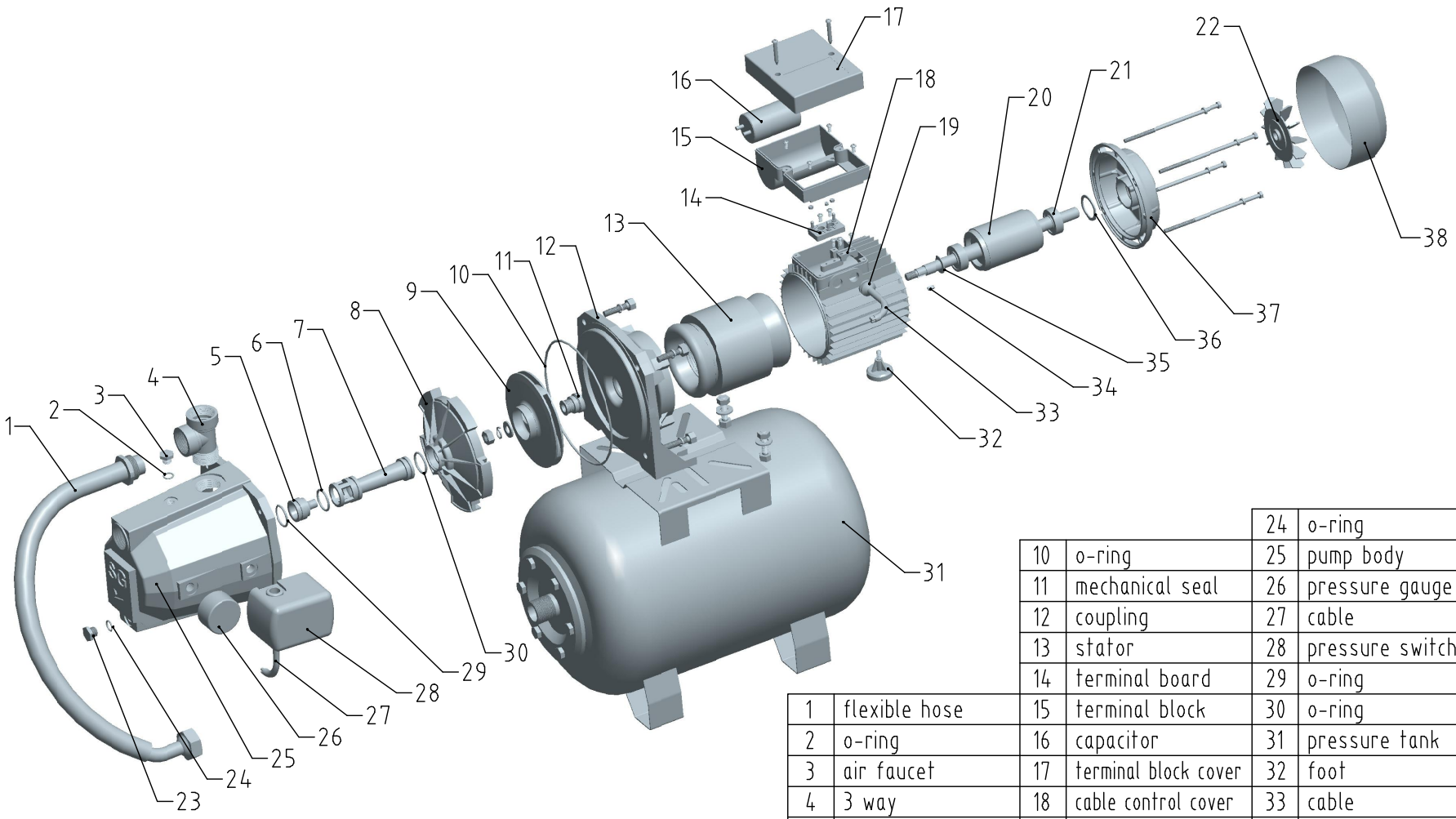

				24	o-ring
		10	o-ring	25	pump body
		11	mechanical seal	26	pressure gauge
		12	coupling	27	cable
		13	stator	28	pressure switch
		14	terminal board	29	o-ring
1	flexible hose	15	terminal block	30	o-ring
2	o-ring	16	capacitor	31	pressure tank
3	air faucet	17	terminal block cover	32	foot
4	3 way	18	cable control cover	33	cable
5	nozzle	19	cable sleeve	34	key
6	o-ring	20	rotor	35	waterproof ring
7	injection pipe	21	bearing	36	wave spring
8	guide vane	22	fan	37	end cover
9	impeller	23	water faucet	38	fan cover